Airplane Flight Manual

WITTMAN TAILWIND W10

HB-YTW

AIRPLANE

Designer / design organization :	**Steve Wittman/ Aircraft Spruce USA**
Kit Builder (if applicable) :	**N/A.....**
Type:	**Wittman Tailwind W10**
Builder :	**Swiss Tailwind Group/ P. Pfiffner**
Serial No:	**00-1151**
Registration:	**HB-YTW**

AIRPLANE FLIGHT MANUAL

The builder / owner is responsible for the appropriate correctness of the content of this manual

Date of Issue:

The Builder : (Name and Signature)

Approval of Section 2 and Agreement of Sections 1, 6, 7 and 8 by EAS on behalf of FOCA :

Date : 7.3.2013

Name : HEINZ LANG

Stamp and Signature :

Partial approval (pages ...) of Section 5 and agreement of sections 3, 4 by EAS on behalf of FOCA :

Date :

Name :

Stamp and Signature :

Final approval by EAS Certfication:

Name, Date:

Stamp and Signature:

This aeroplane is to be operated in compliance with information and limitations contained herein.

0.l Record of revisions

Any revision of the present manual, except actual weighing data, must be recorded in the following table and in case of agreed Sections endorsed by the EAS.

The new or amended text in the revised pages will be indicated by a black vertical line in the left hand margin, and the Revision No. and the date will be shown on the bottom left hand side of the page.

Rev. No	Affected Section	Affected Pages	Date	Approval	Date	Date Inserted	Signature

0.2 Table of Contents

1 General

1. 1 Introduction

The aeroplane Flight Manual has been prepared to provide pilots and instructors with information for the safe and efficient operation of this homebuilt airplane.

This manual includes the material required to be furnished to the pilot of homebuilt airplanes. It may also contain supplemental data supplied by the equipment manufacturers.

1.2 Certification basis

This type of aircraft is not certified in accordance with published Standard Airworthiness Requirements.
It is authorized for flight in accordance with FOCA regulation MZ-275.001 in the special homebuilt category .

1.3 Warnings, cautions and notes

The following definitions apply to warnings, cautions and notes used in the flight manual.

WARNING: means that the non-observation of the corresponding procedure leads to an immediate or important degradation of the flight safety.

CAUTION: means that the non-observation of the corresponding procedure leads to a minor or to a more or less long term degradation of the flight safety.

NOTE: draws the attention to any special item not directly related to safety but which is important or unusual.

1.4 Descriptive Data

Kind of aeroplane

The Tailwind TW10 is a single engine, classic tube and fabric closed fuselage/empennage and wood wing strut braced, high wing monoplane construction with 2 side by side seats and 2 lateral doors. The airplane is a taildragger with 2 front wheels and a steerable tail-wheel. It is intended especially for recreational and cross country flying, non-aerobatic operation.

Design details

Wing span	7.35 m	(24,1 ft.)
Length	5.97 m	(19,6 ft)
Height	1.65 m	(5 ft. 5in)
Wing area (no Dihedral)	8,36 m^2	(90 sq.ft.)
Empty weight	437.5 kg	(965 lbs.)

Gross Weight	646 kg	(1425 lbs.)
Baggage	max 20 kg	(44 lbs.)
Wing section	Modified NACA 4309 (S. Wittman)	
Wing Loading	77.3 kg/m2	(15.8 lb/sq ft.)
Horizontal stabilizer: span/area	1.88 m/ 0,87m2	(74 in./ 9.38 sq.ft.)
Elevator total span/area	1.88 m/ 0.46m2	(74 in./ 4.95 sq.ft.)
Vertical stabilizer span/area incl rudder	1.22 m/ 1,18m2	(48 in./12.66 sq.ft.)
Cockpit Width on Top	1.02 m	(40 in.)
Cockpit Width on Bottom	1.00 m	(39 in.)

Engine and propeller

Engine Lycoming 0-320 E3H Serial n L-36911-27A

Propeller Felix fixed pitch wood 68x74 inch Serial n P-6870170

1.5 Three-view drawing

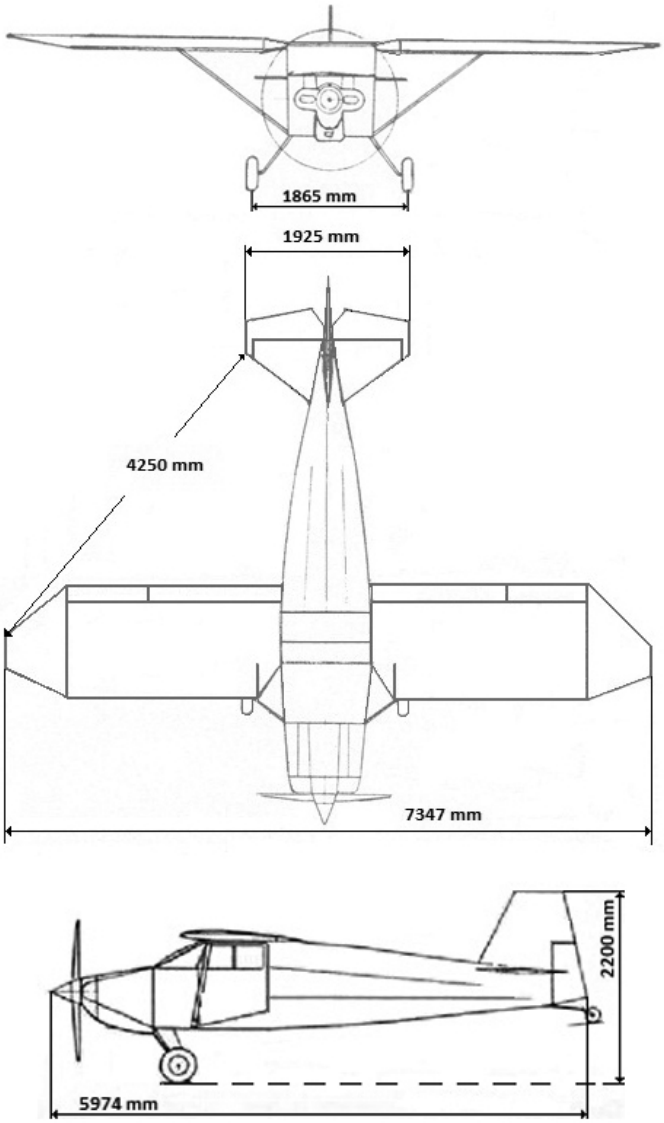

2 LIMITATIONS

2.1 Introduction

Section 2 includes operating limitations, instrument markings, and basic placards necessary for safe operation of the aeroplane, its engine, standard systems and standard equipment.

The limitations included in this section (and in Section 9) have been approved by EAS, on behalf of FOCA

2.2 Airspeed

Airspeed limitations and their operational significance are shown below –

	Speed	KIAS	Remarks
V_{NE}	Never exceed speed	174	Do not exceed this speed in any operation
V_{NO}	Maximum structural cruising speed	150	Do not exceed this speed except in smooth air, and then only with caution.
V_A	Manoeuvring speed	130	Do not make full or abrupt control movement above this speed, because under certain conditions the aircraft may be overstressed by full control movement.
V_{FE}	Maximum Flap Extended speed (if applicable give different flap settings)	87	Do not exceed this speed with the given flap setting.

2.3 Airspeed indicator markings

Airspeed indicator markings and their colour-code significance are shown below –

Marking	IAS-KTS *value or range*	Significance
White arc	48 - 87	Positive Flap Operating Range. *(Lower limit is maximum weight 1á1 V_{SO} in landing configuration. Upper limit is maximum speed permissible with flaps extended positive.)*
Green arc	48 - 145	Normal Operating Range. *Lower limit is maximum weight 1á1 V_{S1} at most forward c.g. with flaps . Upper limit is maximum structural cruising speed.*
Yellow arc	145 - 174	Manoeuvres must be conducted with caution and only in smooth air.
Red line	174	Maximum speed for all operations

2.4 Powerplant

Engine Manufacturer:	Textron Lycoming
Engine Type:	0-320 E3H
Maximum Power:	Take-off: 150 HP
	Continuous 145 HP
Maximum Engine rpm at MSL, Take-off:	Continuous 2400 rpm
Maximum Cylinder Head Temperature:	500°F/ 260°C
Maximum Oil Temperature:	245°F/ 118°C
Oil Pressure:	Minimum: 60 psi (25 psi idling)
	Maximum: 100 psi on start

Fuel pressure: not applicable

Fuel Grade (Specification): AVGAS 100 LL

Oil Grade (Specification): AREOSHELL 15/50

Propeller Manufacturer: Felix prop USA

Propeller Model: Experimental wood fix pitch 68 x 74

Propeller Diameter, Minimum: wood fix pitch 68 inches
Maximum:

2.5 Powerplant instrument markings

Powerplant instrument markings and their colour code significance are shown below:

Instrument	Red Line Minimum Limit	Green Arc Normal Operating	Yellow Arc Caution Range	Red Line Maximum Limit
Tachometer (digital) rpm	750	2200 - 2500	2501 - 2699	2700
Fuel pressure	no			
Oil Temperature °F	100	160 - 220	100 - 160	245
Cylinder head temperature °F		150 - 435	435 - 495	500
Oil pressure psi	25psi	60 - 90		100psi
Others if applicable				

2.6 Miscellaneous instrument markings

(Limitations and markings for miscellaneous instruments, such as vacuum pressure instrument gauge, must be provided, as appropriate.)

2.7 Weight

Maximum Take-off weight: 646 kg (1425 lbs)

Maximum Landing weight: 646 kg (1425 lbs)

Maximum Weight in Baggage Compartment: 20 kg (44 lbs)

2.8 Centre of gravity

Reference datum: From Datum Location is forward Tip of the Spinner

Centre of gravity range (specified for Minimum Flight Weight up to Maximum Take-off Weight) 15% to 28% of M

2.9 Approved manoeuvres

This aeroplane is accepted for flight as per Normal Category.

WARNING

Aerobatics and intentional spins are prohibited

2.10 Manoeuvring load factors

Maximum positive limit load factor + 3.8 G

Maximum negative limit load factor - 1.9 G

2.11 Flight Crew

Single pilot operation

2.12 Kinds of operation

VFR by day

2.13 Fuel

Tank capacity : Total fuel: 100 l (26.5 gal)

Usable fuel 90 l (23.8 gal)

Unusable fuel: 10 l (2.6 gal)

Approved fuel grades: AVGAS 100 LL

Do not overfill the tank to avoid fuel overflow through venting tube

2.14 Maximum seating

2

2.15 Other limitations

No smoking on board of the aircraft

WARNING

IFR flights and intentional flight under icing conditions are PROHIBITED

2.16 Placards

The airplane must be placarded with:

- All circuit brakers
- All switches
- Elevator trim

- Flaps: UP and DOWN (0° , 10° , 20° , 45°)
- Maximum rear baggage weight : 20 kg (44 lbs)
- Instruments
- Airspeed Limitations
- Doors: OPEN – CLOSE
- Fuel Capacity: 100 l (26,5 gallons) AVGAS 100LL at filler neck, not overfuel
- Fireproof Identification plate

3 EMERGENCY PROCEDURES

3.1 Introduction

Section 3 provides checklist and amplified procedures for coping with emergencies that may occur. Emergencies caused by aeroplane or engine malfunction are extremely rare if proper preflight inspections and maintenance are practiced.
However, should an emergency arise, the basic guidelines described in this section should be considered and applied as necessary to correct the problem.

3.2 Engine Failure

Engine failure during take-off run

1. Throttle - idle
2. Ignition switch - switch off
3. Apply brakes carefully

Engine failure during take-off

1. Push control stick forward
2. Speed - gliding at 95 *kts*
3. Altitude - below *1000 ft (330 m)*: land in take-off direction
   - over *1000 ft (330 m)* : choose a landing area
4. Wind - find direction and velocity
5. Landing area - choose free area without obstacles
6. Flaps - extend as necessary
7. Fuel Selector - close
8. Ignition switch - switch off
9. Safety harness - tighten
10. Master switch - switch off before landing
11. Land

Engine failure in flight

1. Speed - gliding at *95 kts*
2. Height - below *1000 ft (330 m)*: land in take-off direction
   - over *1000 ft (330 m)*: choose a landing area
3. Wind - find direction and velocity
4. Landing area - choose free area without obstacles
5. Flaps - extend as necessary
6. Fuel Selector - close
7. Ignition switch - switch off
8. Safety harness - tighten
9. Master switch - switch off before landing
10. Land

3.3 Air start

1. Switches - switch off unnecessary electrical equipment
2. Master switch - switch on
3. Fuel Selector - turn on
4. Throttle - idle
5. Ignition switch - hold activated to start the engine
6. After engine starting
   - other switches - switch on as necessary

3.4 Smoke and fire

Fire on ground at engine starting

1. Fuel Selector - close
2. Throttle - full power
3. Ignition switch - switch off
4. Leave the airplane
5. Fight the fire

Fire on ground with engine running

1. Fuel selector - close
2. Throttle - full power
3. Ignition switch - switch off
4. Leave the airplane
5. Fight the fire

Fire during take-off

1. Speed - 95 kts
2. Fuel Selector - close
3. Throttle - full power
4. Ignition switch - switch off
5. Land, stop and leave the airplane
6. Fight the fire

Fire in flight

1. Fuel Selector - close
2. Throttle - full power
3. Master switch - switch off
4. Ignition switch - switch off after the fuel in carburetors is consumed and engine shut down
5. Choose of area - heading to the nearest airport or choose emergency landing area
6. Emergency landing - perform according to 3.6
7. Leave the airplane
8. Fight the fire

NOTE

Estimated time to pump fuel out of carburetors is 30 sec.

WARNING

Do not attempt to re-start the engine!

3.5 Electrical smoke or fire

1. Master switch off
2. All electrical switches off
3. Master switch on
4. Check single electrical systems
5. Leave off affected system

3.6 Landing emergencies

Emergency landing

1. Speed - adjust for optimum gliding 95 kts
2. Trim - adjust
3. Safety harness - tighten
4. Flaps - extend as necessary
5. COMM - if installed then report your location if possible
6. Fuel Selector - close
7. Ignition switch - switch off
8. Master switch - switch off
9. Perform approach without steep turns and land on chosen landing area.

Precautionary landing

A precautionary landing is generally carried out in the cases where the pilot may be disorientated, the aircraft has no fuel reserve or possibly in bad weather conditions.

1. Choose landing area, determine wind direction
2. Report your intention to land and land area location.
3. Perform low-altitude passage into wind over the right-hand side of the chosen area with flaps extended as needed and thoroughly inspect the landing area.
4. Perform circle pattern.
5. Perform approach at increased idling with flaps fully extended.
6. Reduce power to idle when flying over the runway threshold and touch-down at the very beginning of the chosen area.
7. After stopping the airplane switch off all switches, close the fuel selector, lock the airplane and seek for assistance.

NOTE

Watch the chosen area steadily during precautionary landing.

Landing with a flat tire

1. During landing keep the damaged wheel above ground as long as possible using the ailerons control
2. Maintain the direction on the landing roll out, applying rudder control.

Landing with a defective landing gear

1. If the main landing gear is damaged, perform touch-down at the lowest practicable speed and if possible, maintain direction during landing run.

3.7 Recovery from unintentional spin

WARNING

Intentional spins are prohibited!

There is no uncontrollable tendency of the airplane to enter into a spin provided the normal piloting techniques are used.

Unintentional spin recovery technique:

1. Throttle - idle
2. Lateral control - stick neutral
3. Rudder pedals - full opposite
4. Rudder pedals - neutralize immediately when rotation stops
5. recover dive.

3.8 Other emergencies

Vibration

If any forced aircraft vibrations appear, it is necessary:

1. To set engine speed to such power rating where the vibrations are lowest.
2. To land on the nearest airfield or to perform a precautionary landing according to 3.6.

Carburetor icing

The carburetor icing shows itself through a decrease in engine power and an increase of engine temperatures.

To recover engine power, the following procedure is recommended:

1. Carburetor heat - open
2. Throttle - set to 1/3 of power
3. Speed - min. 95 kts
4. Leave the icing area - as soon as possible
5. Engine power - increase gradually

If you fail to recover the engine power, land on the nearest airfield (if possible) or depending on the circumstances, perform a precautionary landing according to number, 3.6

NOTE

Use carburetor heating during long descents and in areas of possible carburetor icing.

4 NORMAL PROCEDURES

4.1 Introduction

Section 4 provides checklist and amplified procedures for the conduct of normal operation Normal procedures associated with optional systems can be found in Section 9.

4.2 Rigging and derigging not applicable

4.3 Daily Inspection N/A (see preflight inspection)

4.4 Preflight inspection

Carry out preflight inspection every day prior to first flight or after airplane assembly. Incomplete or careless inspection can cause accident. Carry out the inspection following the instructions in the Inspection Check List. Describe the preflight inspection.

NOTE

The word "condition" in the instructions means a visual inspection of surface for damage, deformations, scratching, chafing, corrosion or other damages, which may lead to flight safety degradation.

The pre-flight inspection should be carried out as follows:

Inspection Check List

Ignition - OFF

Master switch - ON

Fuel gauge ind. - check fuel quantity

Master switch - OFF

Avionics - check condition

Control system - visual inspection, function, clearance, free movement up to stops

- check wing flaps operation

Doors- condition of attachment, cleanness of windows

Check cockpit for loose objects

Engine cowling condition

Propeller and spinner condition

Engine mount and exhaust manifold condition

Oil and coolant quantity check

Visual inspection of the fuel and electrical system

Fuel system draining

Other actions according to the engine manual

Wing surface condition

Leading edge condition

Pitot head condition

Aileron - surface condition, attachment, clearance, free movement

Wing flap - surface condition, attachment, clearance

Landing gear - wheel attachment, brakes, condition and pressure of tires

Wing lower surface and fuselage bottom condition

Vertical tail unit - condition of surface, attachment, free movement, rudder stops

Horizontal tail unit - condition of surface, attachment, free movement, elevator stops

The check left side the fuselage and wing is the same as right side

WARNING

Physically check the fuel level before each takeoff to make sure you have sufficient fuel for the planned flight.

CAUTION

In case of long-term parking it is recommended to turn the engine several times (Ignition OFF!) by turning the propeller. Always handle by palm the blade area i.e. do not grasp only the blade edge. It will facilitate engine starting.

4.5 Normal procedures and checklist

(a) Before starting engine

(b) Use of external power

(c) Engine starting

(d) Before taxying

(e) Taxiing

(f) Check before take-off

(g) Take-off

(h) Climb

(i) Cruise

(j) Descent

(k) Check before landing

(1) Balked landing

(m) After landing

(n) Engine shutdown

a) Before engine starting

1. Control system - free & correct movement
2. Windshield and door windows - clean
3. Safety harness - tighten
4. Brakes - fully applied

b) Use of external power

connect battery in baggage area

c) Engine starting

1. Fuel selector - on
2. Mixture - rich
3. Carburetor heat - off
4. Masterswitch - on
5. Alternator, alt. reg, avionics – on
6. Prime with throttle - 2- 3 strokes
7. Throttle - ¼ open
8. Prop area - clear
9. Brakes - set
10. Ignition switch - start
11. Throttle - 800 rpm
12. Oil pressure - check
13. EFIS, Radio, Transponder switches - on
14. Mixture - lean for taxi

CAUTION

The starter should be activated for a maximum of 10 sec., followed by 2 min. pause for starter motor cooling.

As soon as engine runs, adjust throttle to achieve smooth running at approx. 1000 rpm. Check the oil pressure, which should increase within 10 sec. Increase the engine speed after the oil pressure has reached 2 bars (30 psi) and is steady.

To avoid shock loading, start the engine with the throttle lever set for idling or 10 % open at maximum, then wait 3 sec. to reach constant engine speed before new acceleration. Only one magneto should be switched on (off) during ignition magneto check.

d) Engine warm up, Engine check

Prior to engine check block the main wheels using chocks. Initially warm up the engine to 1000 rpm for approximately 2 min., then continue to 1500 rpm till oil temperature reaches 50°C (122°F). The warm up period depends on ambient air temperature.

Check both ignition circuits at 1800 for Lycoming 0-320 E3H The engine speed drop during the time either magneto switched off should not over 120 rpm. The max. engine speed drop difference between circuits L and R should be 80 rpm.

NOTE

Only one magneto should be switched on (off) during ignition magneto check

Set max. power for verification of max. speed with given propeller and engine parameters (temperatures and pressures). Check acceleration from idling to max. power. If necessary, cool the engine at 1000 rpm before shut down.

e) Taxiing

Apply power and brakes as needed. Apply brakes to control movement on ground. Taxi carefully when wind velocity exceeds 20 kts. Hold the control stick in neutral position.

f) Before take-off

1. Altimeter - set
2. Trim - set neutral position
3. Control system - check free movement
4. Cockpit doors - closed
5. Safety harness - tighten
6. Fuel Selector - turn on
7. Ignition switch - switched on (both magnetos)
8. Wing flaps - extend as necessary
9. Transponder -set

g) Take-off

1. Brakes - apply
2. Take-off power - throttle fully forward 2250 rpm
   (max. 2500 rpm for max. 5 min.)
3. Instruments within limits - check
4. Brakes - release
5. Airplane lift-off - 66 kts

6. Transit to climb - after reaching airspeed 75kts

7. Wing flaps - retract at safe altitude

(max. airspeed for flaps using is 87kts)

h) Climb

1. Throttle - max. take-off power (max. 2500 rpm for max. 5 min.)

- max. continuous power (2400 rpm)

2. Airspeed vx 75 kts

vy 93 kts

3. Trim - trim the airplane

4. Instruments - oil temperature, oil pressure and CHT within limits

CAUTION

If the cylinder head temperature or oil temperature approach their limits, reduce the climb angle to decrease airspeed and thus fulfill the limits.

i) Cruise

Refer to section 5, for recommended cruising figures

j) Descend

Optimum glide speed - 95 kts

k) Approach

Approach speed - 75 kts

1. Throttle - as necessary

2. Wing flaps - extend as necessary

3. Trim - as necessary

CAUTION

It is not advisable to reduce the engine throttle control lever to minimum on final approach and when descending from very high altitude. In such cases the engine becomes under-cooled and a loss of power may occur. Descent at increased idle (approx.1500 rpm), speed between 100-120 kts and check that the engine instruments indicate values within permitted limits.

Normal landing

Before landing

1. Throttle - as necessary

2. Airspeed - 64 kts

3. Wing flaps - extend as necessary

4. Trim - as necessary

Landing

1. Throttle - idle

2. Touch-down on main wheels

3. Apply brakes only as necessary

After landing

1. Throttle - engine rpm set as required for taxiing

2. Wing flaps - retract

3. Trim - set neutral position

4. Transponder – set

l) Balked landing procedures

1. Throttle - max. take-off power (max. 2500 rpm for max. 5 min.)

2. Passing to climb - after reaching 75 kts

3. Trim - adjust as necessary

4. Wing flaps - retract at safe altitude (max. airspeed for flaps using is 87 kts)

5. Trim - adjust as necessary

6. Repeat circle pattern

m) Engine shutdown

1. Throttle - idle 1000 rpm

2. Instruments - engine instruments within limits

3. Switches - switch off except Instrument and Master

4. Mixer – pull complete

5. Ignition key - turn off

6. Instruments - switch off

7. Master switch - switch off

8. Fuel Selector - close

CAUTION

Rapid engine cooling should be avoided during operation. This happens, above all, during aircraft descent, taxiing, low engine rpm or at engine shutdown immediately after landing.

Under normal conditions the engine temperatures stabilize during descent, taxiing and at values suitable to stop engine by switching the ignition off. If necessary, cool the engine at 1000 rpm to stabilize the temperatures prior to engine shut down.

o) Aircraft parking and tie-down

1. Ignition switch - OFF
2. Master switch - OFF
3. Fuel selector - close
4. Doors - close, lock as necessary
5. Secure the airplane (tie down, chokes)

NOTE

Use the upper strut ends and tailwheel gear leg to fix the airplane. Move control stick forward and fix it together with the rudder pedals. Make sure that the doors are properly closed and locked. The anchoring before leaving the airplane is important if the airplane is not equipped with a parking brake.

5 PERFORMANCE

5.1 Introduction

Section 5 provides approved data for airspeed calibration, stall speeds and take-off performance and non-approved additional information.

The data in the charts has been computed from actual flight tests with the aeroplane and engine in good condition and using average piloting techniques.

5.2 Approved data

5.2.1 Airspeed indicator system calibration (kt)

Clean configuration

IAS	80	90	100	110	120
CAS	79.5	90	98	109	117

Landing configuration

IAS	70	80
CAS	70	79

5.2.2 Stall Speed

	PWR off	PWR on
clean	59 KIAS	49 KIAS
Flaps land	53 KIAS	40 KIAS

5.2.3 Takeoff performance

TAKEOFF PERFORMANCE

ROTATION SPEED IAS: 50 kt WEIGHT: 646 kg
CLIMB SPEED IAS: 60 kt Apply full power then release brakes
Hard runway surface

Pressure Altitude feets	0°C Ground Run m	0°C Distance over 15 m obstacle m	10°C Ground Run m	10°C Distance over 15 m obstacle m	20°C Ground Run m	20°C Distance over 15 m obstacle m	30°C Ground Run m	30°C Distance over 15 m obstacle m	40°C Ground Run m	40°C Distance over 15 m obstacle m
0	270	418	292	446	312	472	330	497	347	519
2000	325	511	354	554	381	595	407	634	431	673
4000	391	622	428	682	464	741	498	799	531	856
6000	469	754	516	835	562	916	607	996	650	1076
8000	567	920	627	1027	686	1134	743	1242	799	1350

5.2.4 Landing distances

LANDING PERFORMANCE

TOUCHDOWN SPEED: 59 kt WEIGHT: 646 kg
APPROACH SPEED: 69 kt
Hard runway surface

Pressure Altitude feets	0°C Ground Run m	0°C Distance over 15 m obstacle m	10°C Ground Run m	10°C Distance over 15 m obstacle m	20°C Ground Run m	20°C Distance over 15 m obstacle m	30°C Ground Run m	30°C Distance over 15 m obstacle m	40°C Ground Run m	40°C Distance over 15 m obstacle m
0	294	683	318	724	339	763	360	798	378	831
2000	354	835	385	899	415	960	443	1020	469	1077
4000	425	1016	466	1107	505	1196	542	1284	578	1371
6000	511	1232	562	1355	612	1478	661	1600	708	1722
8000	618	1503	683	1666	747	1830	809	1995	870	2161

5.2.5 Climb performance

Rate of climb at sea level , 15°C at MTOW and Vy 93 KIAS: 1270 ft/ min
Service ceiling : 17700 ft

5.3 Additional. information

5.3.1 Cruise and Endurance

Powersetting 65.00%

Press Alt ft	rpm	IAS	Fuel Flow L/h	Endurance h
3000	2300	134	30	03:00 h
9000	2300	117	29	03.07 h

Powersetting 55.00%

Press Alt ft	rpm	IAS	Fuel Flow L/h	Endurance h
3000	2100	117	27	03:20 h
9000	2100	105	26	03:27 h

5.3.2 Take off measurements

Lift off speed V1: 50 KIAS .

5.3.3 Demonstrated crosswind performance.

20 kts.

5.3.4 Noise data.

According to noise certificate

6 WEIGHT AND BALANCE

6.1 Introduction

6.2 Weighing procedure

6.3 Weight and balance record

6.4 Permitted payload range or calculation samples

6.5 Equipment list

6.1 Introduction

This section contains the payload range within which the aeroplane may be safely operated and the procedures for weighing the aircraft, the calculation method for establishing the permitted payload range and a comprehensive list of all the installed equipment during the weighing of the aircraft.

6.2 Weighing procedure

The plane has been weighted using precision balances from RUAG Lodrino . After putting the the airplane in a perfect horizontal position the different weight measures were taken 2 times each. Between each measure the airplane was wiggled. The difference between the 2 measurement was less than 1%.
Reference Datum was the tip of the spinner.

6.3 Weight and balance record

Date	In	Out	Description of modification	Weight Change						Running Basic Empty Weight	
				Added (+)			Removed (-)				
				Wt-Kg	Arm m.	Mom.	Wt-Kg	Arm m.	Mom.	Weight	Mom.
15.06.13			As weighed (7.5.2011)							437.5 kg	759.2

6.4 Permitted payload range or/and Calculation samples

Gross Weight 646 kg **Desired CG Range 15% - 28%**

6.4.1 Loading calculation (empty airplane)

	Item	Weight (Kg)	Arm (m)	Moment (mKg)
1	Basic empty weight, from table 6.3	437.5	1.74	759.2
2	Pilot	0		0
3	Co-pilot / passenger	0		0
4	Fuel, header Tank (1 l = 0.72 Kg)	0		0
5	Baggage	0		0
6	Total	437.5		759.2

CG at 17.7%

6.4.2 Most forward CG

	Item	Weight (Kg)	Arm (m)	Moment (mKg)
1	Basic empty weight, from table 6.3	437.5	1.74	759.2
2	Pilot	72	2.12	152.6
3	Co-pilot / passenger	0		0
4	Fuel, header Tank (1 l = 0.72 Kg)	70	1.47	102.9
5	Baggage	0		0
6	Total	579.5		1014.7

CG at 18.9%

6.4.3 Most rearward CG

	Item	Weight (Kg)	Arm (m)	Moment (mKg)
1	Basic empty weight, from table 6.3	437.5	1.74	759.2
2	Pilot	72	2.12	152.6
3	Co-pilot / passenger	81	2.12	171.7
4	Fuel, header Tank (1 l = 0.72 Kg)	28	1.47	41.2
5	Baggage	20	2.87	57.4
6	Total	641.5		1182.1

CG at 25.5 %

In this configuration recommended limit baggage weight max 20 kg (44lbs)

6.5 Equipment list

The following list shows all installed equipment (Main parts like wings or flight controls which are parts of the basic design and cannot be changed by other make must not be listed) This list must be checked at weighing for correctness.

	EQUIPEMENT	MANUFACTURER	TYPE
1	Propeller	Felix	Experimental 68x74 wood/fix pitch
1	Propeller Extension	Saber	4 inches
1	Propeller spinner	homebuilt/Aluminum	
1	Engine	Lycoming	0-320 E3H
2	Magnetos	Bendix	S4-LN21 / S4-LN20
1	Engine Starter	Prestolite	MZ 4206
1	Alternator	Pelican Aviation	35 amp
1	Battery	Sonnenschein	Ah 40
1	Avionics	Dynon	D 10A
1	Avionics	AvMap	Mk IV
1	Radio	Icom	A 200
1	Transponder	Trig	TT22 mode S
1	ELT	Kannad	406 AF

7 AEROPLANE AND SYSTEMS DESCRIPTION

7.1 Introduction

7.2 Airframe

7.3 Flight controls (including Flap and Trim)

7.4 Instrument panel

7.5 Landing gear system

7.6 Seats and safety harness

7.7 Baggage compartment

7.8 Doors, windows and exits

7.1 Introduction

This section provides description and operation of the aeroplane and its systems.
Refer to Section 9, Supplements, for details of optional systems and equipment.

7.2 Airframe

The Tailwind W10 is a single engine classic welded tube (4130 cr/mo alloy) and fabric fuselage/empennage and strut braced wood high wing closed monoplane construction with 2 side by side seats and 2 lateral doors. The airplane is a taildragger with steerable tailwheel.

7.3 Flight controls

The plane is equipped with dual stick controls and foldable right seat rudder pedals.
Elevator, ailerons and flaps are operated with push/pull rods, the rudder with cables.

Elevator trim is mechanical spring loaded working on the entire moving surface .

Control travel:

elevator: 30° up - 25° down
rudder: not less than 30° on both sides
ailerons: 36° up - 28° down (differential movement)
flaps: 10°- 20°- 45° down

7.4 Instrument panel

1 Ignition Switch
2 Dual EGT/ CHT
3 Compass
4 Hourmeter
5 Airspeed meter kts
6 Tachometer digital
7 Dynon D 10 A
8 Turn coordinator
9 Altimeter
10 Vertical speed
11 Intercom
12 Fuel valve
13 Transceiver Icom A200
14 Transponder Trig 22
15 Fuel level
16 Fuel pressure (disconnected)
17 Oil temperature
18 Oil pressure
19 Volts
20 Amps
21 Carb heat
22 Throttle
23 Mixture
24 ELT switch
25 AV Map GPS
26 Masterswitch split
27 Toggle switches
28 Cigarette Lighter Receptacle as 12 V accessory el. Supply

7.5 Landing gear system

The plane is a fixed taildragger with 2 front wheels and a steerable tailwheel connected via asymmetrical compression springs to the rudder. Gear legs are tempered steel rods fixed to the motor mount(S. Wittman 's patent).
2 Matco MC-5 hydraulic cyinders on rudder pedals and Cleveland hydraulic disc brakes and 5x500 wheels.
No parking brake.

7.6 Seats and safety harness

The side by side seats are adjustable in 3 positions but only on ground. Seat upholstery is removable. The seats fold forward for easy access to the baggage area and battery. A four point safety harness is provided for each seat.

7.7 Baggage compartment

The baggage compartment is located behind the seats. It may accommodate max 20 kg (44 lbs) of baggage.

NOTE
Make sure that baggage does not exceed maximum allowable weight and that the aircraft CG is within limits with loaded baggage. All baggage must be properly secured.

7.8 Doors, windows and exits

Doors are located on both sides of the airplane and give easy access to the seats.
Doors can be locked from inside and outside by door latches and are marked **open - close**

7.9 Powerplant

A Lycoming 0-320 E3H (150 Hp, 4 cylinder opposed, air cooled spark ignition aspirated aviation engine) is installed.
The engine is fitted with an external oil cooler, electric starter and alternator.

Engine monitoring instrumentation
Oil pressure sender and oil temperature valve are installed.
EGT and CHT sensors are intalled on cylinder 4.

Throttle and Primer
Engine power is controlled by means of throttle (friction lock black) and Mixer (Vernier red) control cables which are positioned on the lower centre panel. A spring is added to the carburetor throttle lever to ensure that the engine will go full power if the linkage fails.

Carburetor
Heated air can be provided to the carburetor through the airbox which is controlled through a ratchet cable control which is installed on the left side of the 2 power controls on the panel.

Engine Oil
Refer to engine Operator's Manual for detailed oil type information.
Areoshell 15/50 is recommended.
Oil volume is 8 l

Propeller
A fixed pitch wood Felix propeller 68x 74 with spinner is installed

Cabin Heating
consists of a heat exchanger on the exhaust manifold and control ratchet mechanism is located on the right side of the panel.

CAUTION
Since fatal accidents involving exhaust gases entering the cabin with subsequent carbon monoxide poisoning of the occupants may happen, monoxide detector is recommended

Carbon monoxide detector
is installed at the center of the panel

7.10 Fuel system

It is kept as simple as possible. It is just a free fall system without fuel pumps neither mechanical nor electrical.
The welded aluminum tank which is vented through a ram air intake under the right wing going into the filler neck, is placed behind the firewall in front of the instrument panel. There is a sump in the bottom of the tank with a finger strainer and a fuel valve inside the cabin. The fuel line goes through the firewall to the gascolator and then to the carburetor.

Fuel level is measured by a float type sender.

The following schematic shows a the fuel system layout:

Recommended fuel type:
AVGAS 100LL 100 l (26,5 gallons)

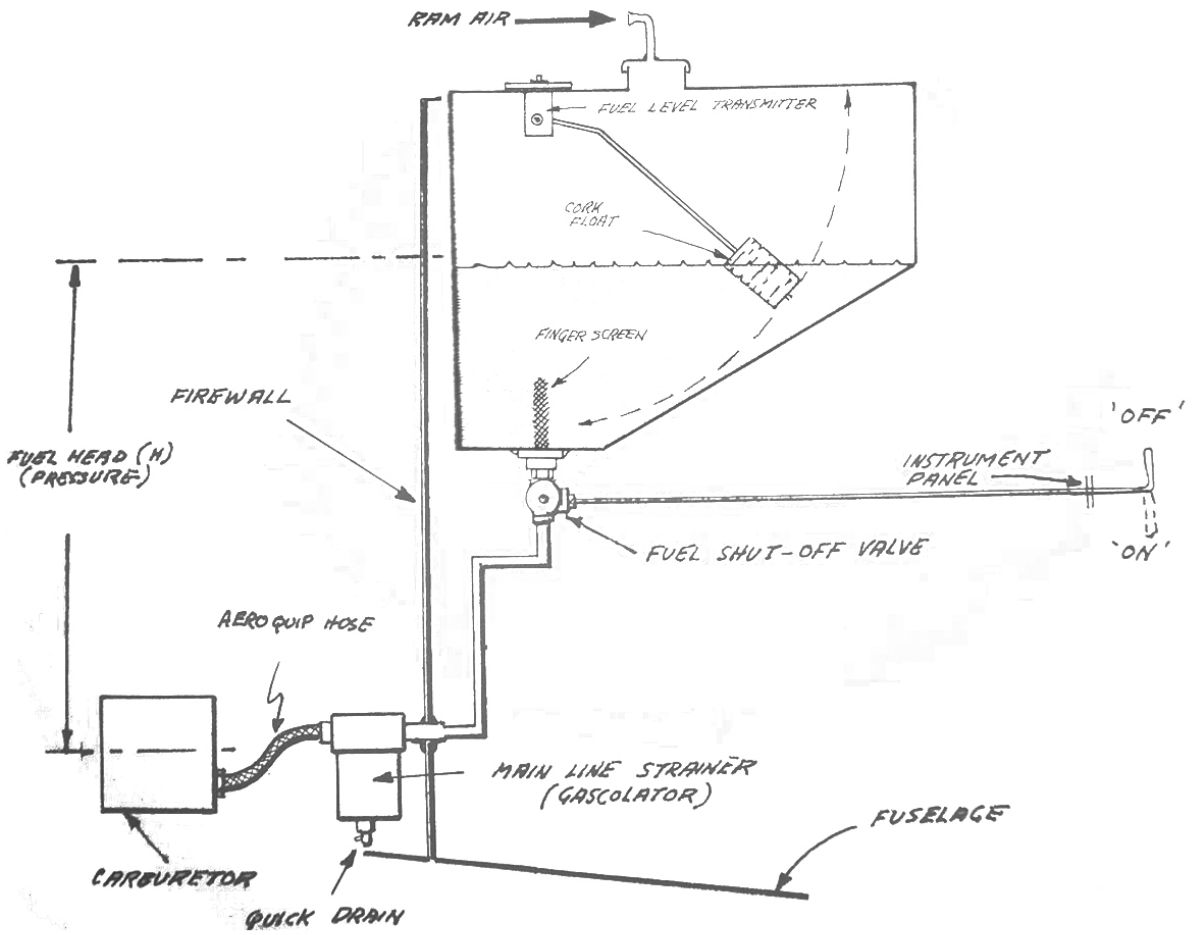

7.11 Electrical system

Battery
12 Volt battery is mounted under the baggage compartment on the right side

Master switch
A split Cessna type masterswitch connects the electrical system to the 12 Volt battery via a master solenoid and a starter solenoid.

Ignition switch
must be on BOTH position to operate the engine. For safety remove the key when engine is not running.

NOTE
All switches are up for operation.

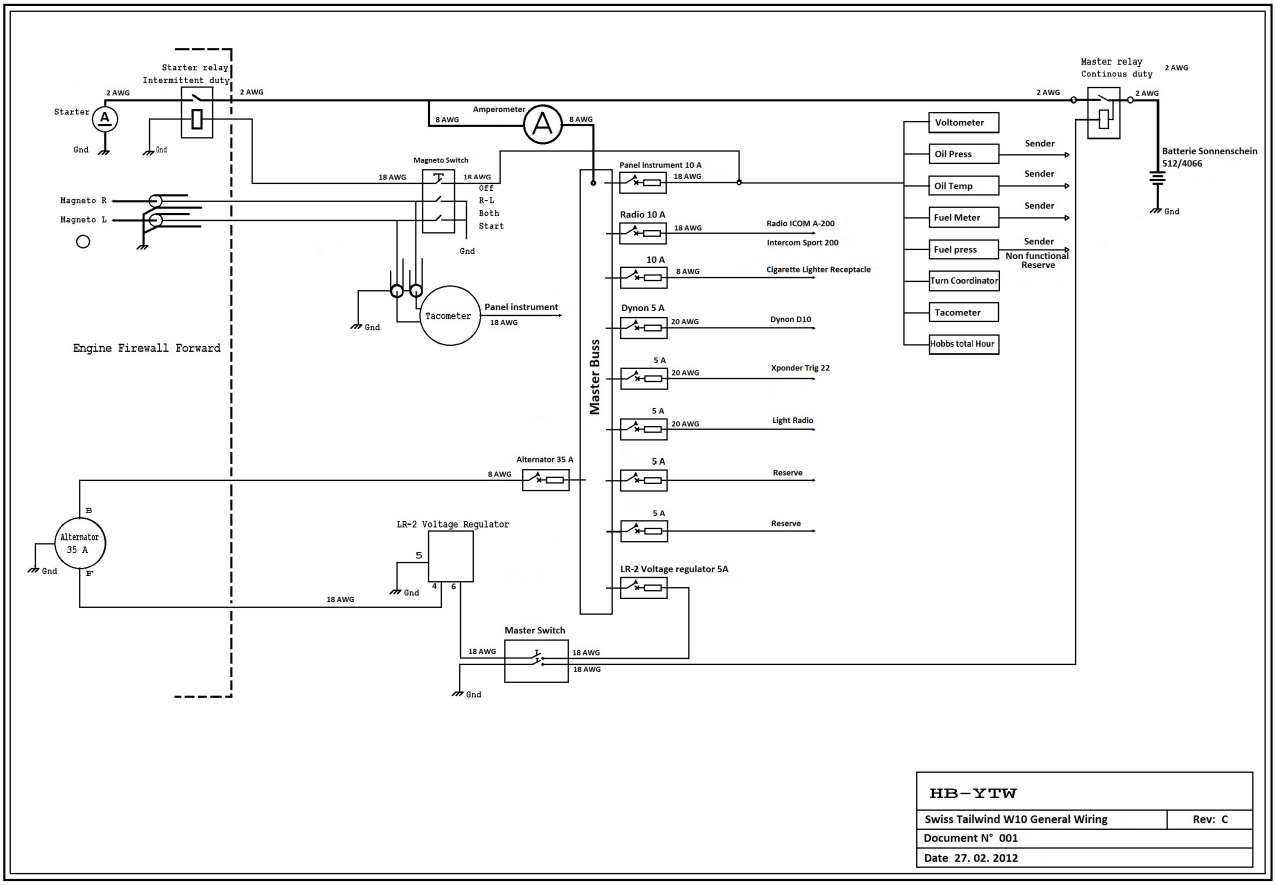

7.12 Pitot and static pressure systems

Pitot
Pitot tube is enbedded in the left wing's leading edge. Pressure distribution to the instruments is through flexible plastic hoses. 2 static ports are located in the back of the fuselage underside. Pressure distribution to the instruments is also through flexible plastic tube.

NOTE
Keep the pitot head and the static ports clean to ensure proper function of the system

7.13 Miscellaneous equipment

None

7.14 Avionics

Conventional analog instrumention:

- airspeed
- vertical speed
- Turn coordinator
- Compass

Digital instrumentation

- Tachometer/ hourmeter digital (see specific instructions)
- Dynon EFIS D10A as back up instrumentation (see Dynon Avionics documentation)
- AV Map GPS Mk IV (see AvMap instruction)

Radio , Transponder , ELT

- Radio Icom A 200 (see Icom instructions)
- Transponder TRIG TT22 (see TRIG instructions)
- Elt (Kannad 406 AF)

8 AEROPLANE HANDLING, SERVICING AND MAINTENANCE

8.1 Introduction

8.2 Aeroplane inspection periods

8.3 Aeroplane alterations or repairs

8.4 Ground handling/Road transport

8.5 Cleaning and care

8.1 Introduction

This section contains recommended procedures for proper ground handling and servicing of the aeroplane. It also identifies certain inspection and maintenance requirements which must be followed if the aeroplane is to retain that new-plane performance and dependability. It is wise to follow a planned schedule of lubrication and preventive maintenance based on climatic and flying conditions encountered.

8.2 Aeroplane inspection period

See appropriated chapters in Lycoming engine maintenance and Operator's manuals
Inspections and revisions should be carried out in the following periods and at least
after the first 25 flight hours
after every 50 flight hours
after every 100 flight hours or at least annual inspection

8.3 Aeroplane alterations or repairs

It is essential that the EAS be contacted prior to any alterations on the aeroplane to ensure that airworthiness of the plane is not violated.
Major repairs which may impair the airworthiness of the aeroplane when improperly done must be proposed to the EAS for comment and / or approval.

8.4 Ground handling/ Road transport

(a) Towing

(b) Parking

(c) Mooring

(d) Jacking

(e) Levelling

(f) Road transport (if applicable) including dissembling for road transport and assembling after road transport.)

a Towing

To handle the airplane on the ground you can simply grab the tailwheel by hand since the airpane is quite light.

CAUTION

Avoid excessive pressure at the airframe especially control surfaces and struts. Keep all safety precautions, especially in the propeller area.

b Parking

It is advisable to park the airplane inside a hangar or alternatively inside any other suitable space (garage) with stable temperature, good ventilation, low humidity and dust free environnement.

It is necessary to moor the plane when it is parked outside. Also when parking for a long time cover the windshield, possibly the whole airplane by means of a suitable tarpaulin.

c Mooring

The airplane should be moored when parked outside after a flight day in order to protect it from possible damage due to wind and gusts.

1. Check : Fuel Selector CLOSE. Master switch and other switches OFF
   Ignition switch OFF and key out
2. Fix the control stick in forward position
3. Close air vents
4. Close and lock doors
5. Moor the airplane to the ground by means of mooring ropes attached to upper part of the struts and the rear tail leg.

d Road transport

is possible on a suitable trailer. It is necessary to take off the wings do do this.

8.5 Cleaning and care

Describe cleaning procedures for the following aircraft items:

Use soft clean cloth sponge and non abrasive detergents like simple soap and lukewarm water for all surfaces

CAUTION
Never clean the windshield and windows under dry condition and never use petrol or chemical solvents

(a) Painted exterior surfaces

(b) Propeller

(c) Engine

(d) Interior surfaces, seats and carpets,

and explain the recommended cleaning agents and give caution notes, if necessary.

Upholstery may be removed from cockpit, brushed and eventually washed with luke-warm water.

CAUTION

In case of long term parking or intensive sunshine cover the windshield to protect the cockpit interior from direct sunshine

9 SUPPLEMENTS

9.1 Introduction

9.2 List of inserted supplements

9.3 Supplements inserted

9.1 Introduction

This section contains the appropriate supplements necessary to safely and efficiently operate the aeroplane when equipped with various optional systems and equipment not provided with the standard aeroplane.

9.2 List of inserted supplements

Title of the inserted supplement

9.3 Supplements inserted

Each supplement should normally cover only a single system, device or piece of equipment such as an autopilot, ski or navigation system.
The supplement may be issued by the aeroplane manufacturer or by any other manufacturer of the applicable item.
The supplement must be approved by the EAS and must contain all deviations and

changes relative to the basic Flight Manual.
Each supplement should be a self-contained, miniature Flight Manual with at least the following:

Section 1 General
The purpose of the supplement and the system or equipment to which it specifically applies should be stated.

Section 2 Limitations
Any change to the limitations, markings or placards of the basic Flight Manual should be stated. If there is no change, a statement to that effect should be made.

Section 3 Emergency procedures
Any addition or change to the basic emergency procedures of the Flight Manual should be stated. If there is no change, a statement to that effect should be made.

Section 4 Normal procedures
Any addition or change to the basic normal procedures of the Flight Manual should be stated. If there is no change, a statement to that effect should be made.

Section 5 Performance
Any effect of the subject installation upon aeroplane performance as shown in the basic Flight Manual should be indicated. If there is no change, a statement to that effect should be made.

Section 6 Weight and balance
Any effect of the subject installation upon weight and balance of the aeroplane should be indicated. If there is no change, a statement to that effect should be made.)